vehicle : 306 new		OPR : 9226	
domain	protections and doors	function	seat belts / air bags
component			
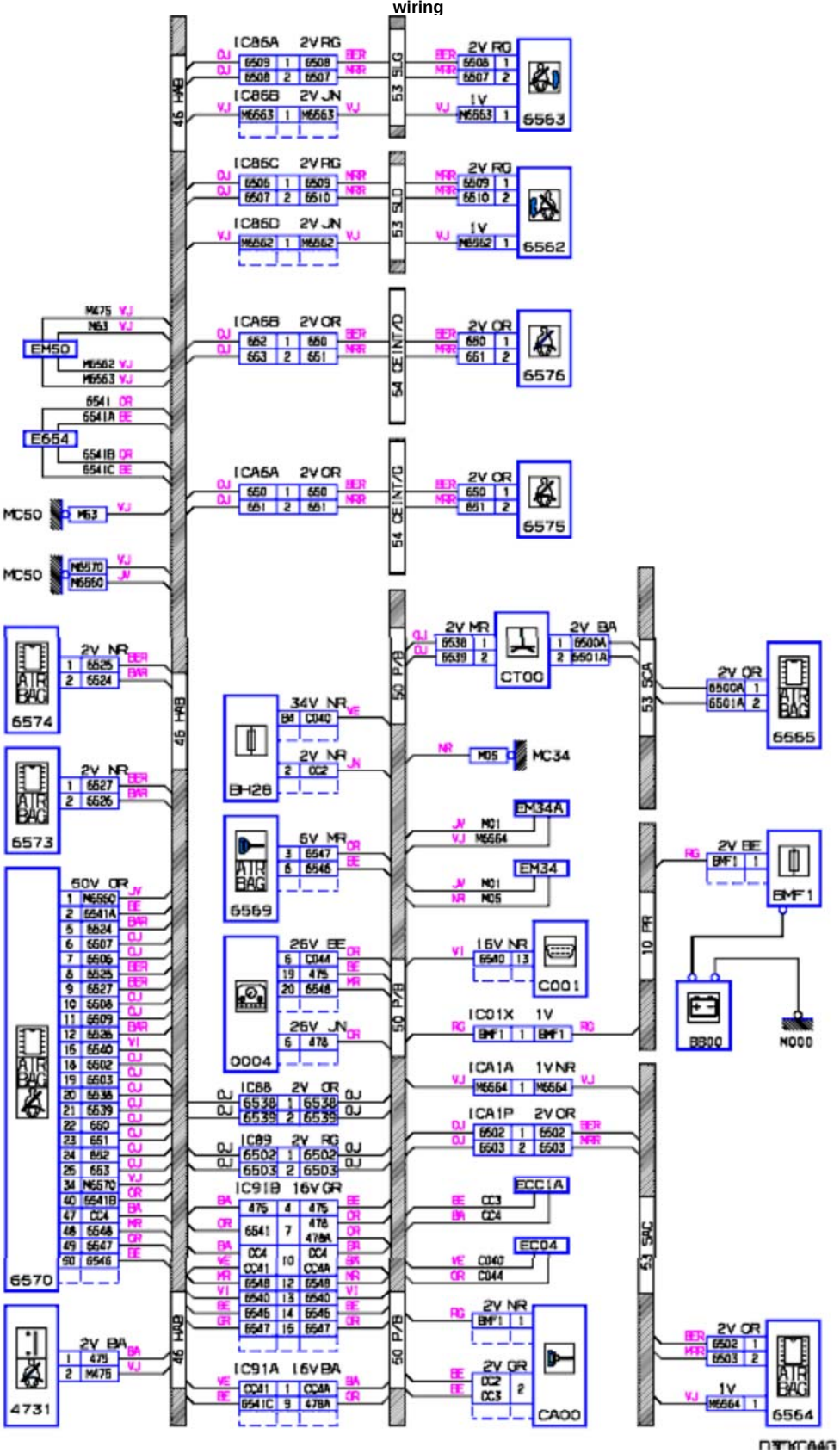
wiring